Montering för Connect

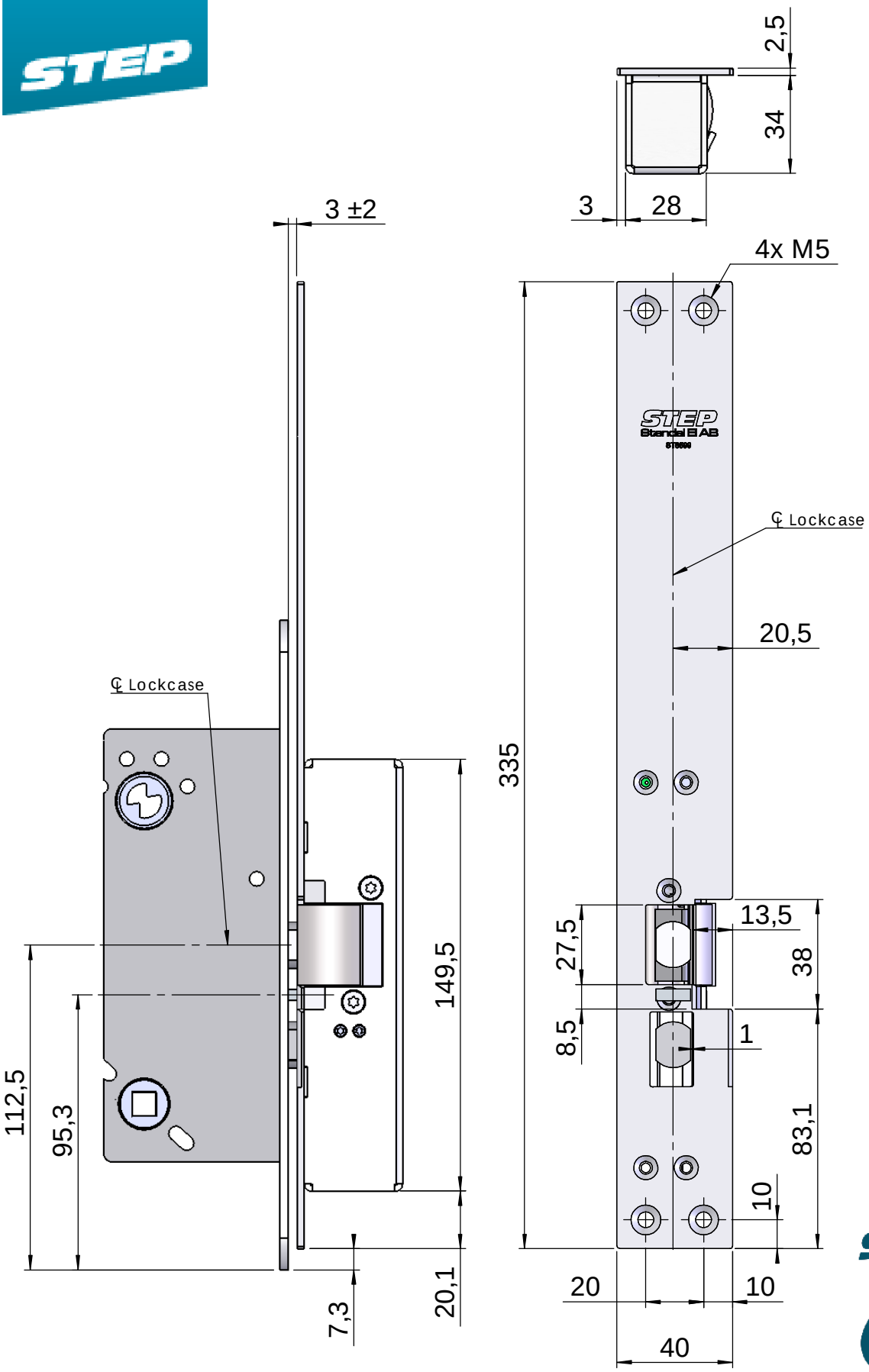

STEP 60 SILENT

Owner	Title/Description
Stendals El AB	Ersätter Step 15 modul vänster till Step 60 connect Montering för Connect
	Drawing no. ST6599 — Scale 1:2

This document shall not be copied without owners written allowance and its content shall not be exposed for third part nor be used for unauthorized purpose.