Montering för Connect

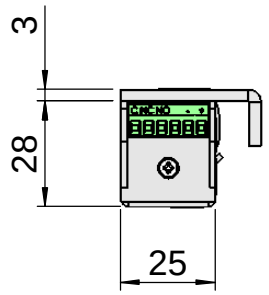

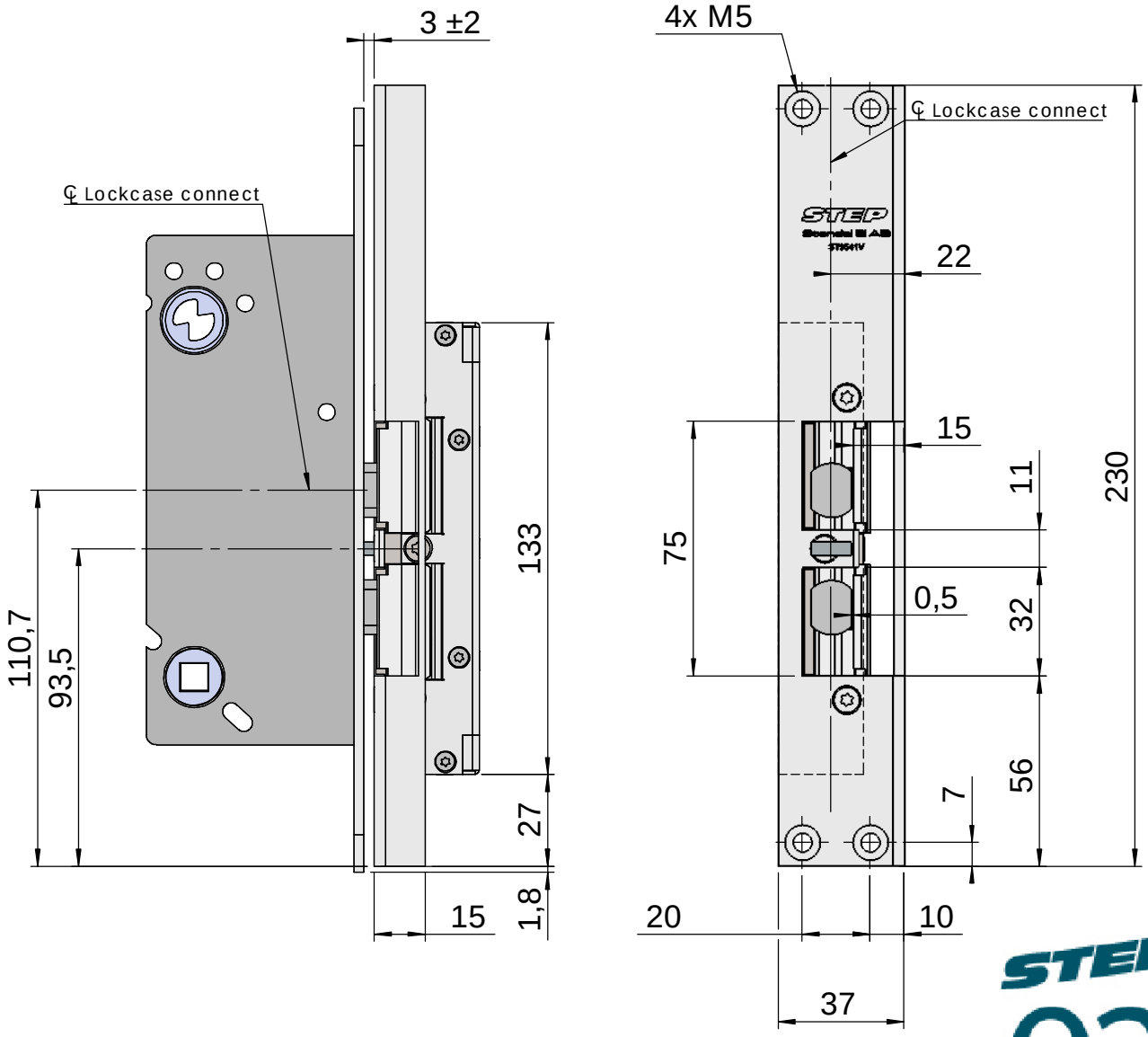

STEP 92 PRELOAD

Owner	Title/Description	
Stendals El AB	STEP 92 med vinklad stolpe plös 15mm Montering för Connect	
	Drawing no. ST9541V	Scale 1:2

This document shall not be copied without owners written allowance and its content shall not be exposed for third part nor be used for unauthorized purpose.

Montering för Modul

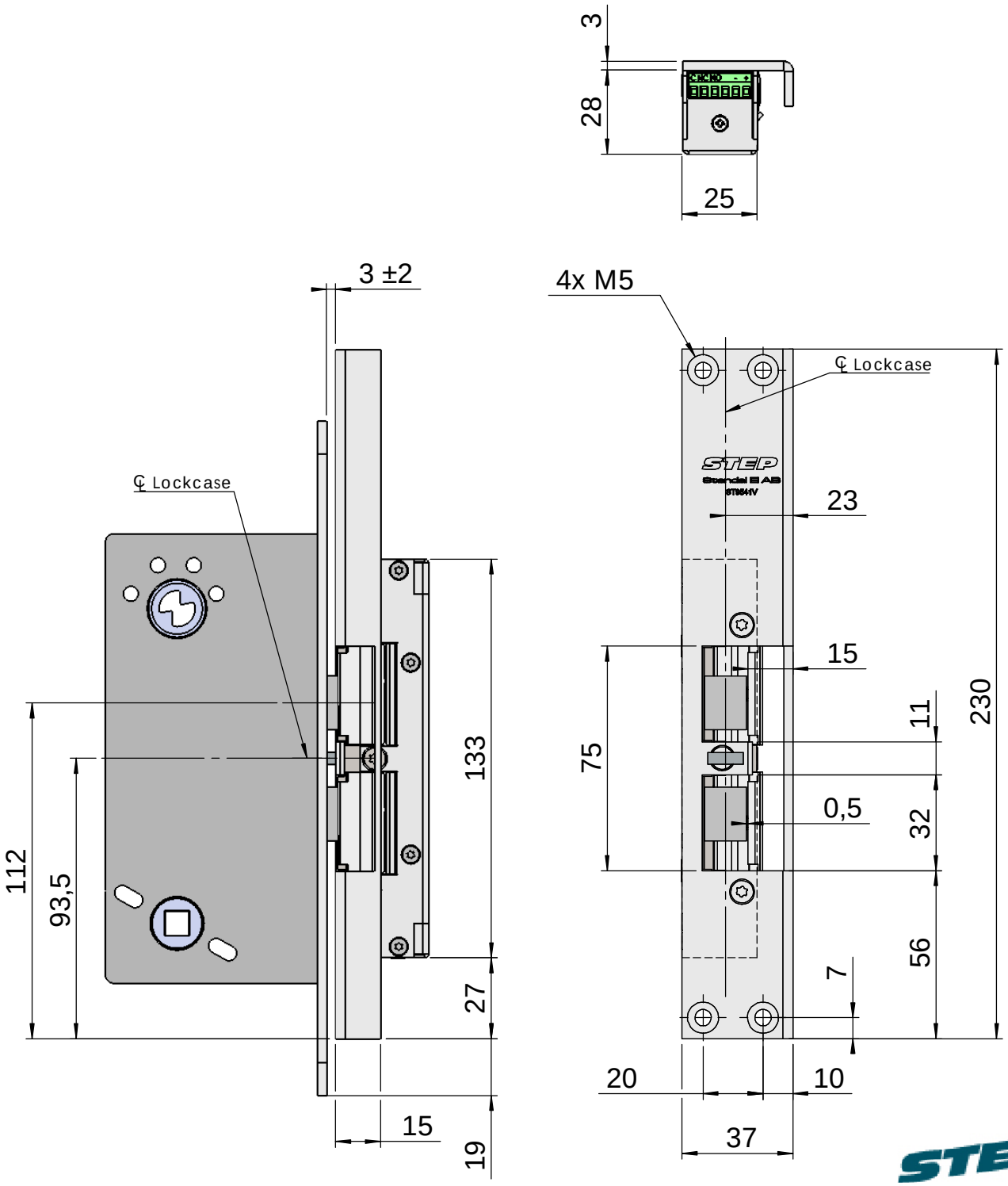

STEP 92 PRELOAD

Owner	Title/Description
Stendals El AB	STEP 92 med vinklad stolpe plös 15mm Montering för Modul
	Drawing no. ST9541V — Scale 1:2

This document shall not be copied without owners written allowance and its content shall not be exposed for third part nor be used for unauthorized purpose.