Montering för Connect

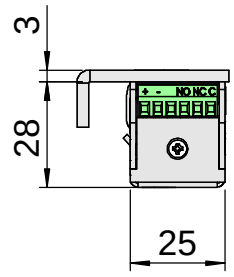

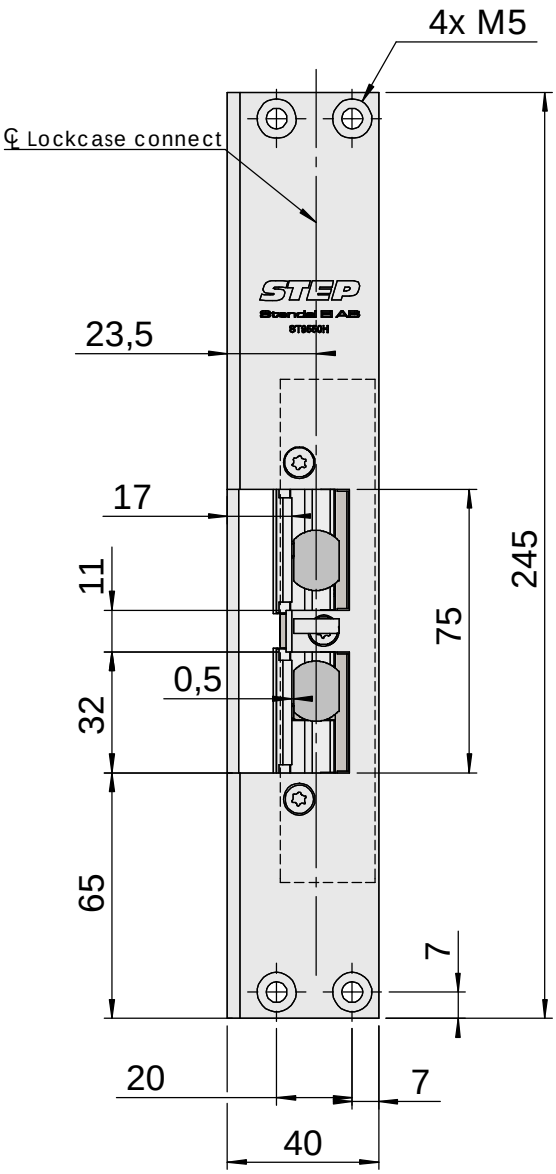

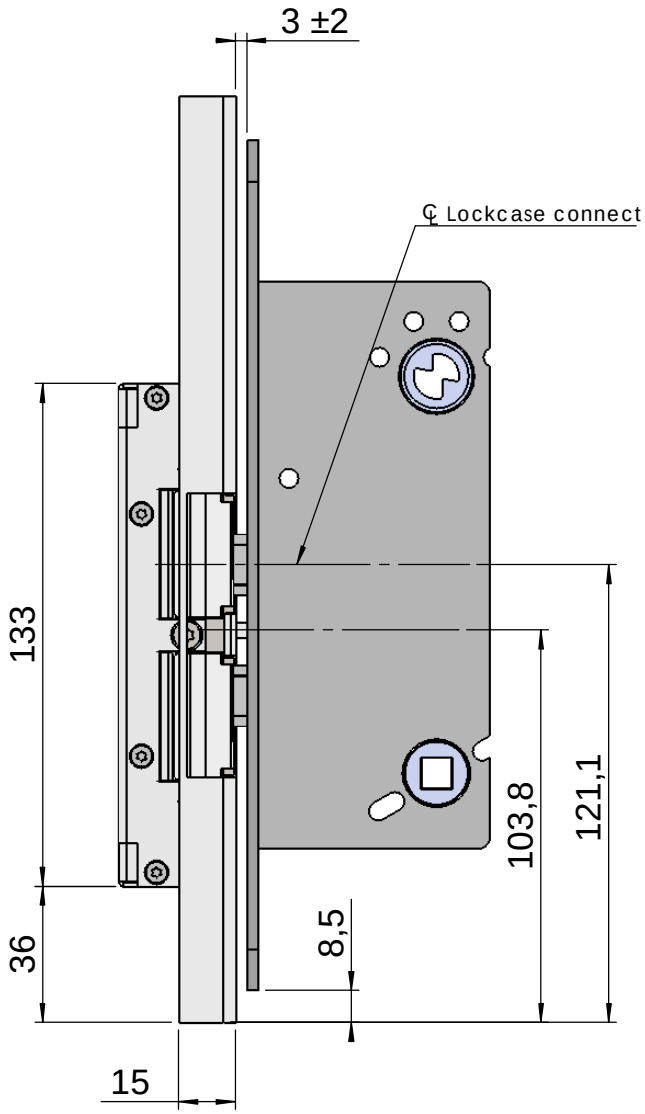

STEP 92 PRELOAD

Owner	Title/Description
Stendals El AB	STEP 92 med vinklad stolpe plös 17mm Montering för Connect
	Drawing no. ST9550H — Scale 1:2

This document shall not be copied without owners written allowance and its content shall not be exposed for third part nor be used for unauthorized purpose.

Montering för Modul

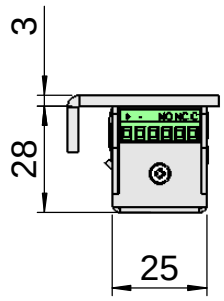

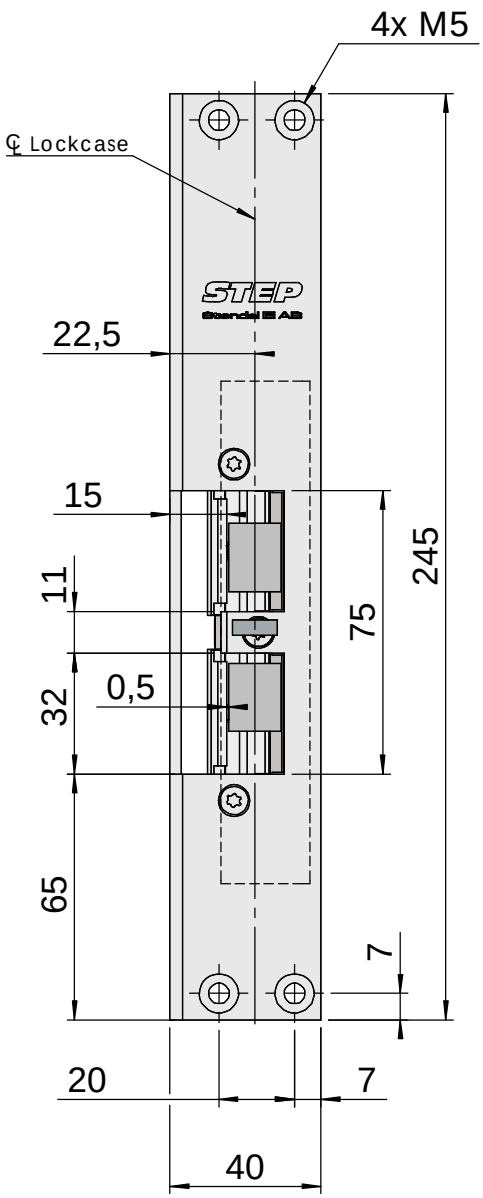

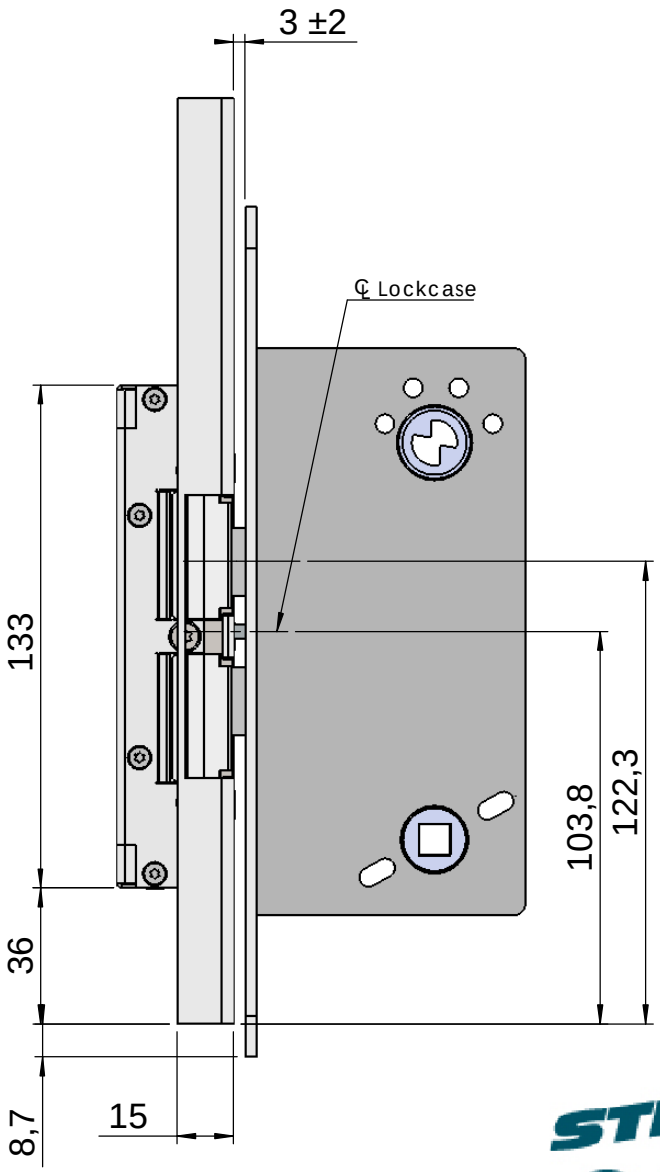

STEP 92 PRELOAD

Owner	Stendals El AB
Title/Description	STEP 92 med plan vinklad plös 17mm Montering för Modul
Drawing no.	ST9550H
Scale	1:2

This document shall not be copied without owners written allowance and its content shall not be exposed for third part nor be used for unauthorized purpose.