ST9551V

Flat faceplate 240x50 Left

Lip width 27,5 mm

Scale 1:3

STEP 92 Preload
STEP 92 Release

ASSA Connect

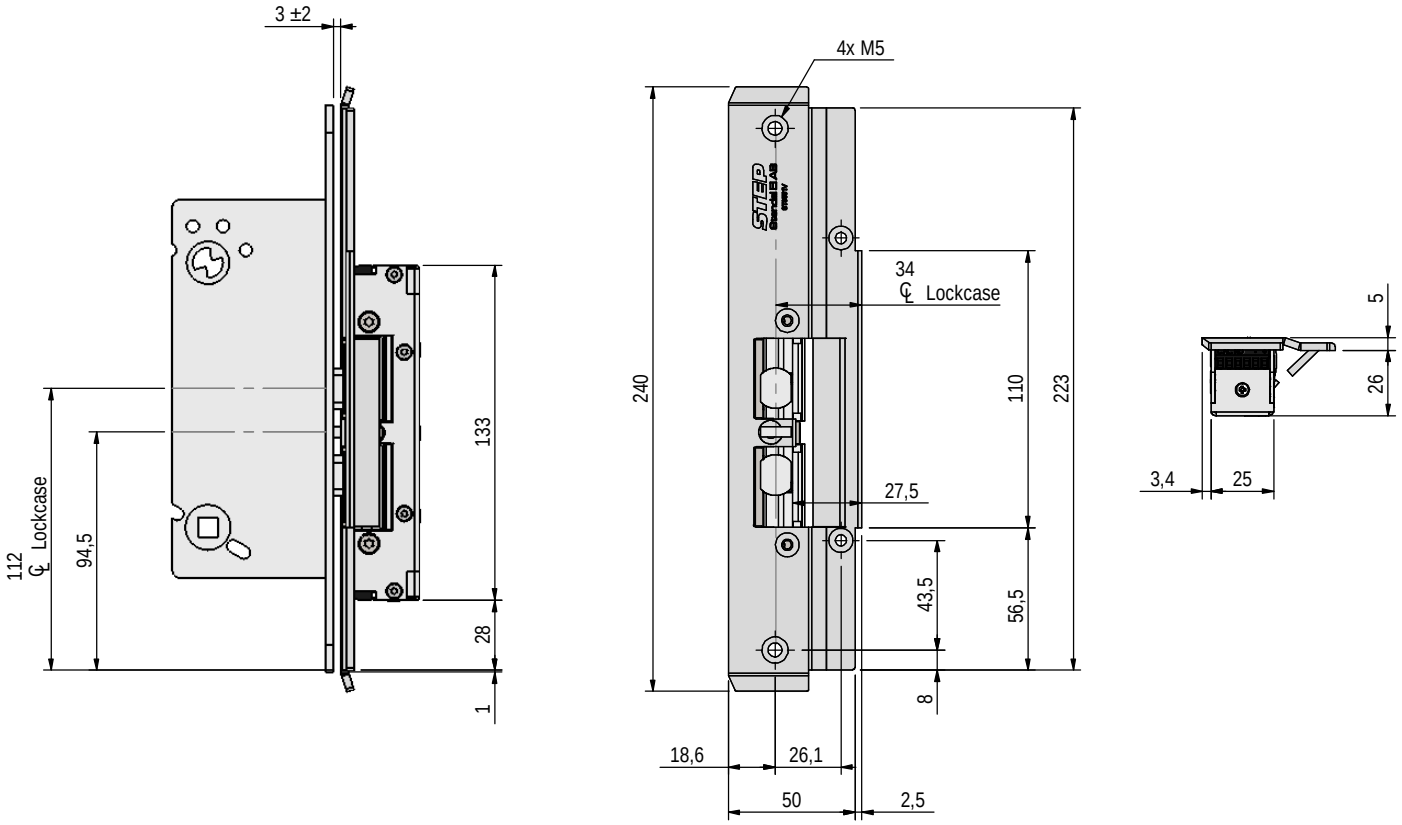

STEP 92 Preload
STEP 92 Release
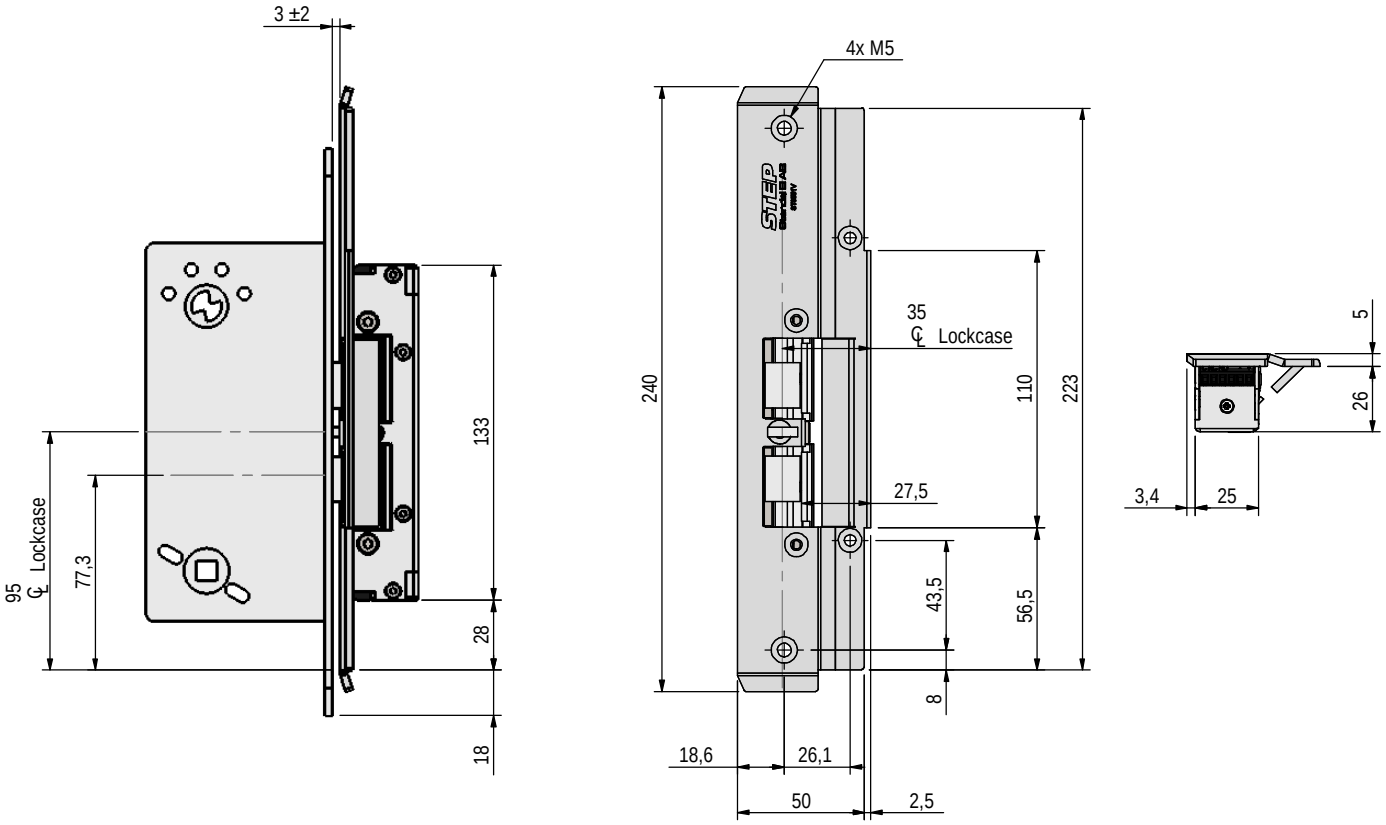
ASSA Modular