ST2009-15

Security strike plate 200x40
Lip width 15.5 mm
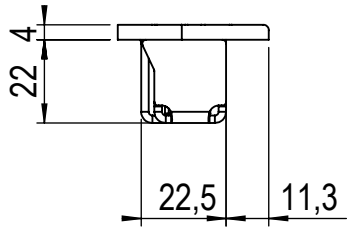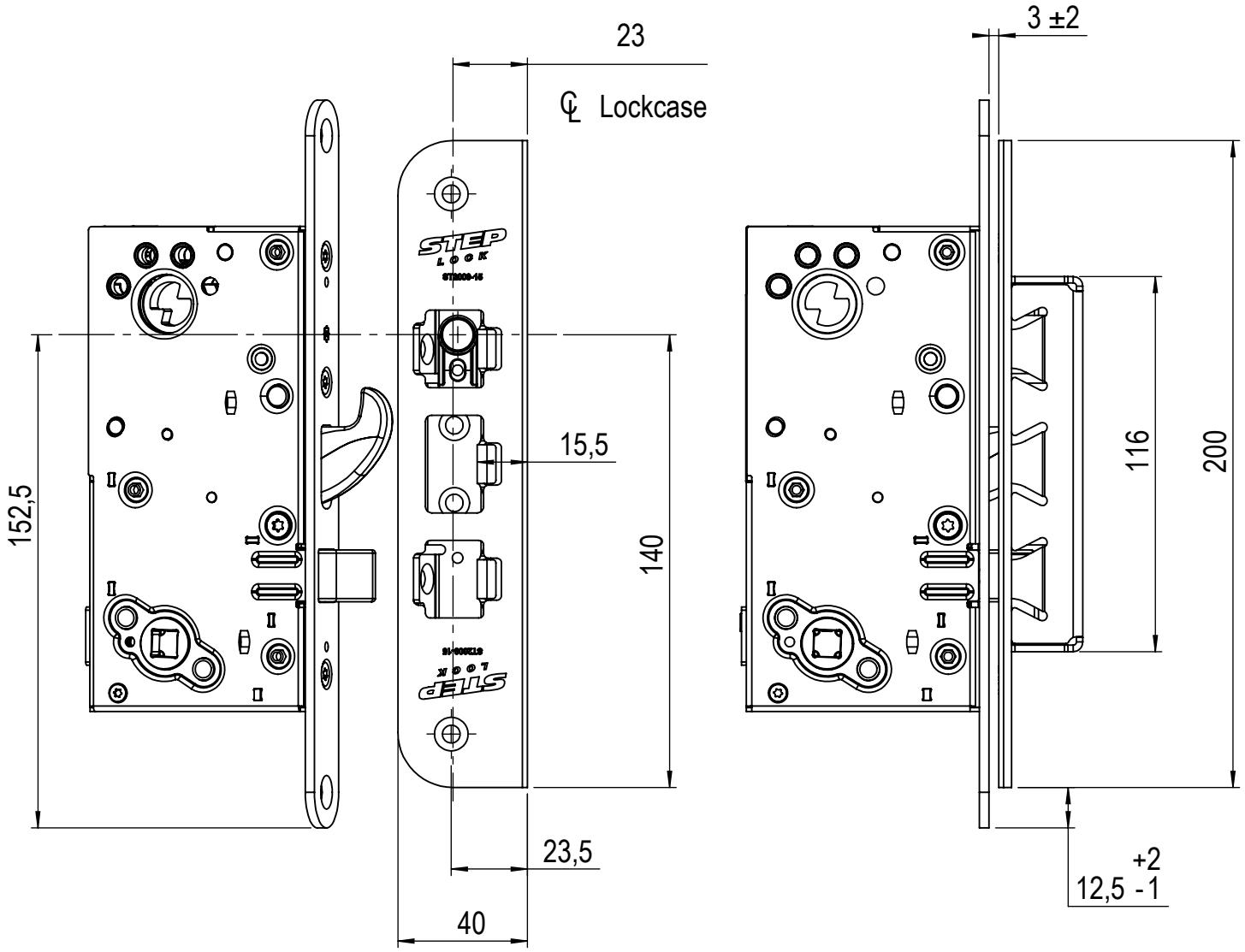
Scale
1:2